997

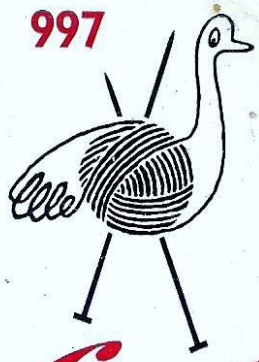

Emu

6D

DOUBLE KNITTING

Chest 21-22 ins. 15-16 ozs.

PRAM SET

in

Emu

SCOTCH DOUBLE KNITTING

DOUBLE CREPE

BRI-NYLON DOUBLE KNITTING (EMULON)

To obtain a perfect result from this pattern it is essential to use Emu Wool and to purchase a sufficient quantity to complete the garment.

NOTE—These instructions are written in 2 sizes, stitches and measurements for the smaller size being given in the ordinary way, the larger size being bracketed in the following space. Owing to the number of sizes quoted in this pattern, we suggest that you underline all the figures for the size you require before commencing.

To Fit Chest	21 ins.	22 ins.
Actual Measurements	22 ins.	23 ins.
The Set	15 ozs.	16 ozs.
Small amount of contrast colour wool for Embroidery		
Length Jacket	12 ins.	12½ ins.
Sleeve Seam	7 ins.	8 ins.

One pair each of Emu Knitting Needles size 8 and 10.
One Cable Needle.
4 Buttons for Jacket.
1 Button for Hat.
Elastic to fit waist, plus 8 inches.

TENSION

6 stitches and 8½ rows to 1 square inch over pattern.
5½ stitches and 8 rows to 1 square inch over stocking stitch.

We recommend that you test your tension before commencing the garment.

ABBREVIATIONS

K., knit; p., purl; st(s)., stitch(es); st.st., stocking stitch; tog., together; dec., decrease(ing); inc., increase(ing); m.1., make one by putting wool forward before a k. st. and wool round needle before a p. st.

JACKET

BACK

Using size 8 needles, cast on 100 (106) sts. and k.2 rows.
Work pattern as follows:-
1st row: K.
2nd row: ∗ P.4, k.2, rep. from ∗ to last 4 sts., p.4.
Rep. 1st and 2nd rows twice.
7th row: K.3, ∗ k. next st. winding wool twice around needle, k.2, rep. from ∗ to last st., k.1.
8th row: K.3, ∗ bring wool to front of work, slip long st. purlwise, bring wool to back of work, k.2, rep. from ∗ to last st., k.1.
9th row: K.3, ∗ slip long st. purlwise, k.2, rep. from ∗ to last st., k.1.
10th row: As 8th row.
11th row: K.3, ∗ slip long st. onto cable needle and leave at front of work, k. into front of third st. (long st.) on left hand needle, but do not drop st. from needle, k. first st., then second st., now drop long st. already knitted, k. long st. from cable needle, k.2, rep. from ∗ to last st., k.1.
12th row: As 2nd row.
Rows 3—12 inclusive form the pattern.
Rep. rows 3—12 inclusive 4 times more then rows 3—11 once. Work should measure approximately 7½ inches.
1st size
Dec. row: P.3, ∗ [p.2 tog.] twice, p.1, rep. from ∗ to last 2 sts., p.2. (62 sts.)
2nd size
Dec. row: P.1, ∗ [p.2 tog.] twice, p.1, rep. from ∗ to end. (64 sts.)

Both sizes
Change to st.st. (1 row k., 1 row p.)
Shape Armholes
Cast off 3 sts. at the beg. of the next 2 rows. Dec. 1 st. at each end of next and 3 following alternate rows. Continue without further shaping until work measures 4 (4½) inches from commencement of armhole shaping, ending with a p. row.
Shape Shoulders
Cast off 4 sts. at the beg. of the next 4 rows and 5 sts. at the beg. of the following 2 rows. Cast off the remaining sts.

RIGHT FRONT

Using size 8 needles, cast on 52 (54) sts. and k.2 rows.
Work pattern as follows:-
1st row: K.
2nd row: ∗ P.4, k.2 rep. from ∗ to last 22 (24) sts., p.4, k.18 (20) sts.
Rep. 1st and 2nd rows twice.
7th row: K.21 (23), ∗ k. next st. winding wool twice around needle, k.2, rep. from ∗ to last st., k.1.
8th row: K.3, ∗ bring wool to front of work, slip long st. purlwise, bring wool to back of work, k.2, rep. from ∗ to last 19 (21) sts., k.19 (21).
9th row: K.21 (23), ∗ slip long st. purlwise, k.2, rep. from ∗ to last st., k.1.
10th row: As 8th row.
11th row: K.21 (23), ∗ slip long st. onto cable needle and leave at front of work, k. into front of third st. (long st.) on left hand needle, but do not drop st. from needle, k. first st., then second st., now drop long st. already knitted, k. long st. from cable needle, k.2, rep. from ∗ to last st., k.1.

Emu

12th row: As 2nd row.
Rep. rows 3—12 inclusive 4 times more, then rows 3—11 once.

Dec. row: [P.1, p.2 tog.] 10 times, [p.2 tog.] twice, slip the last 18 (20) sts. onto a safety pin. 22 (22) sts. Change to st.st. Work 1 row.

Shape Armhole
Cast off 3 sts. at the beg. of the next row. Dec. 1 st. at armhole edge on the next and 3 following alternate rows. Continue without further shaping until work measures 3 (3½) inches from commencement of armhole shaping, ending at neck edge. Keeping armhole edge straight, dec. 1 st. at neck edge on the next 2 rows. Continue without further shaping until work measures the same as Back to shoulder, ending at armhole edge.

Shape Shoulder
Cast off 4 sts. at the beg. of the next and following alternate row. Work 1 row. Cast off remaining 5 sts. Join in wool at inside edge to sts. left on safety pin, k. to end. K. 2 rows.

1st Buttonhole row: K.2, cast off 2, k.10 (12) including st. used in casting off, cast off 2, k.2.

2nd Buttonhole row: K., casting on over cast off sts. in previous row.
Continue in garter st. (every row k.) for 2 (2½) inches measured from base of previous buttonhole. Work another pair of buttonholes. Work a further ½ inch in garter st. Cast off.

LEFT FRONT

Work to match Right Front, reversing shapings and garter st. border and omitting buttonholes.

SLEEVES

Using size 10 needles, cast on 32 (34) sts., and work in k.1, p.1 rib for 1¼ inches. Change to size 8 needles and st.st. Inc. 1 st. at each end of the 5th and every following 6th row until there are 44 (48) sts. on the needle. Continue without further shaping until work measures 7 (8) inches from the beg., ending with a p. row

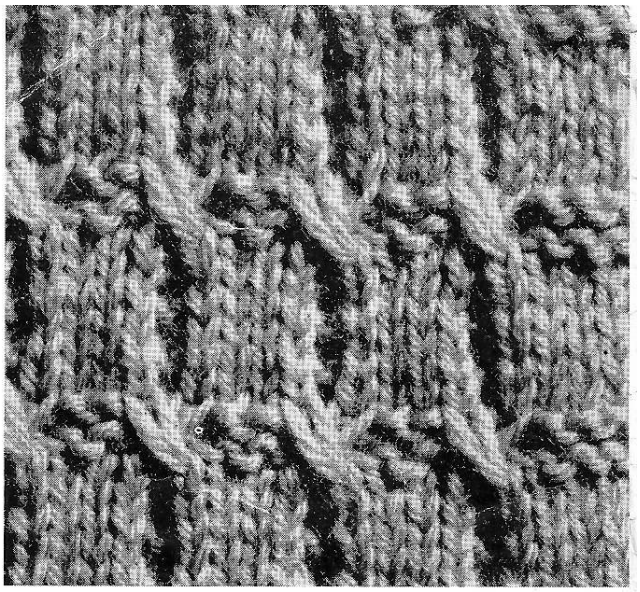

Shape Top
Cast off 3 sts. at the beg. of the next 2 rows. Dec. 1 st. at each end of the next and every following alternate row until 26 (30) sts. remain, then at each end of every row until 12 (12) sts. remain. Cast off.

COLLAR

Using size 8 needles, cast on 62 (66) sts. Work in garter st. for 2½ inches. Cast off.

LEGGINGS

RIGHT LEG

★ Using size 10 needles, cast on 58 (60) sts. and work in k.1, p.1 rib for ½ inch. Make eyelet holes for elastic.

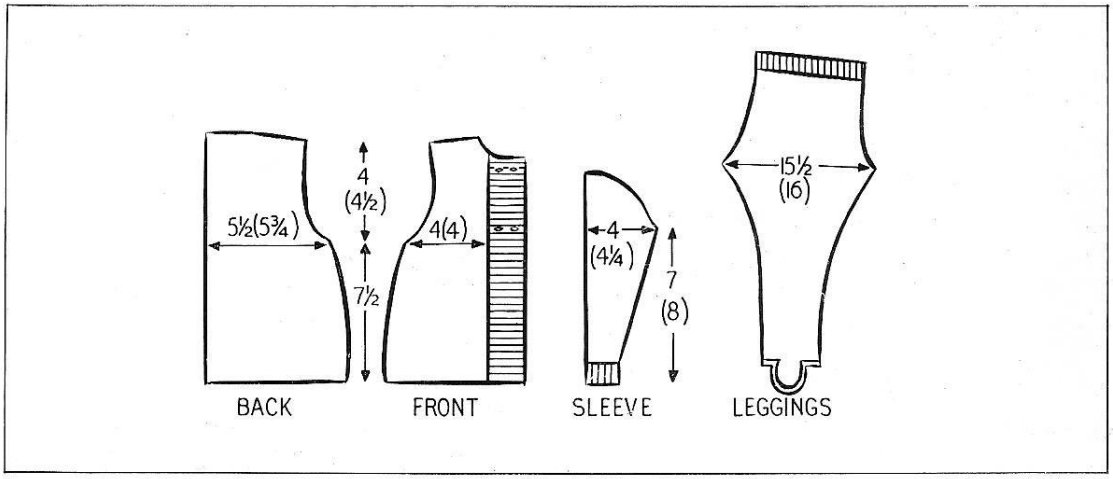

Next row: Rib 2 (3), m.1, work 2 tog., ∗ rib 2, m.1, work 2 tog., rep. from ∗ to last 2 (3) sts., rib 2 (3). Work a further ½ inch in rib. Change to size 8 needles and st.st., shaping the back as follows:-★

1st row: K.11 (10), turn.

2nd and all wrong side rows: P.

3rd row: K.20 (18), turn.

Continue in this way, working 9 (8) extra sts. in every k. row and inc. 1 st. at end (back edge) of 10th row for **1st size** and 8th row for **2nd size** until 12 (11) sts. remain to be knitted.

Next row: K. across all sts.

For **2nd size** only inc. 1 st. at end (back edge) of next row.

Both sizes: Work 3 (5) rows without shaping. Inc. 1 st. at back edge in next and every following 5th (6th) row until there are 63 (65) sts. on the needle. Work 1 (5) rows without shaping.

Next row: 1st size Inc. 1 st. at front edge.

2nd size Inc. 1 st. at each end of row.

Both sizes: Continue to inc. 1 st. at back edge in every 5th (6th) row and inc. 1 st. at front edge in every following 3rd row until there are 82 (76) sts. on the needle.

2nd size only Continue to inc. at front edge in every 3rd row, but inc. at back edge in every 5th row until there are 84 sts. on the needle.

Both sizes Inc. 1 st. at each end of next 2 rows. 86 (88) sts. Work 1 row without shaping.

Shape Leg

Dec. 1 st. at each end of every row until 72 (74) sts. remain, then at each end of every alternate row until 56 (66) sts. remain, then at each end of every 3rd row until 30 (32) sts. remain. Continue without shaping until work measures 10 (11) inches from the beg. of leg shaping ending with a p. row.

Shape Instep

Next row: K.23 (24) sts. and turn.

Next row: P.10 sts., turn and work on these 10 sts. for 1¾ (2) inches, ending with a p. row. Break off wool and join it to the 13 (14) sts. already knitted, then pick up and k.13 (14) sts. along side of instep, k. across the 10 toe sts., pick up and k.13 (14) sts. along second side of instep and k. remaining 7 (8) sts. K.4 rows on these 56 (60) sts. Cast off.

LEFT LEG

Work as for Right Leg from ★ to ★ then follow instructions for Right Leg commencing with a p. row instead of a k. row and reversing k. and p. rows throughout until the instep is reached.

Shape Instep

With right side facing. k.17 (18) sts. and turn.

Next row: P.10 sts., turn and work on the 10 sts. for 1¾ (2) inches, ending with a p. row.

Break off wool and join it to the 7 (8) sts. already knitted, pick up and k.13 (14) sts. along side of instep, k. across the 10 toe sts., pick up and k.13 (14) sts. along second side of instep and k. remaining 13 (14) sts. K. 4 rows on these 56 (60) sts. Cast off.

HAT

Commencing with ear flaps and using size 8 needles, cast on 6 sts. Work in garter st. (every row k.) inc. 1 st. at each end of the next and every following 4th row until there are 18 sts. on the needle. Leave these sts. on a safety pin. Work another piece the same.

Main Part

Using size 8 needles, cast on 12 (14) sts. and continue across the 18 sts. of first ear flap, then cast on 36 (38) sts. on same needle and continue knitting across 18 sts. from second ear flap, then cast on 12 (14) sts. Work 12 rows in garter st. on these 96 (102) sts.

Now work pattern as follows:-

1st row: K.

2nd row: P.2, ∗ k.2, p.4, rep. from ∗ to last 4 sts., k.2, p.2.

Rep. 1st and 2nd rows twice.

7th row: K.1, ∗ k. next st. winding wool twice around needle k.2, rep. from ∗ to last 2 sts., k. next st. winding wool twice around needle, k.1.

8th row: K.1, ∗ bring wool to front of work, slip long st. purlwise, bring wool to back of work, k.2, rep. from ∗ to last 2 sts., bring wool to front of work, slip long st. purlwise, bring wool to back of work, k.1.

9th row: K.1, ∗ slip long st. purlwise, k.2, rep. from ∗ to last 2 sts., slip long st. purlwise, k.1.

10th row: As 8th row.

11th row: K.1, ∗ slip long st. onto cable needle and leave at front of work, k. into front of third st. (long st.) on left hand needle, but do not drop st. from needle, k. first st., then second st., now drop long st. already knitted, k. long st. from cable needle (referred to as twist 4), k.2, rep. from ∗ to last 5 sts., twist 4, k.1.

12th row: As 2nd row.

Now work rows 3—11 inclusive. Change to garter st. Work 2 rows.

Next row: 1st size: [K.2 tog.] twice, k.42, [k.2 tog.] twice. k.42, [k.2 tog.] twice. (90) sts.

2nd size: K.2 tog., k. to last 2 sts., k.2 tog. (100 sts.)

Both Sizes: Shape Top

1st row: ∗ K.7 (8), k.2 tog., rep. from ∗ to end.

2nd and every alternate row: K.

3rd row: ∗ K.6 (7), k.2 tog., rep. from ∗ to end.

5th row: ∗ K.5 (6), k.2 tog., rep. from ∗ to end.

Continue dec. in this manner until 10 (10) sts. remain. Break off wool, thread through sts., draw up and fasten off.

STRAP

Using size 8 needles, cast on 6 sts. Work 4 inches in garter st.

Buttonhole row: K.2, cast off 2, k. to end.

Next row: K. casting on over cast off sts.

Continue in garter st., dec. 1 st. at each end of next and every following alternate row until 2 sts. remain. K.2 tog., and fasten off.

TO MAKE UP

Pin out each piece to correct measurements and press with a warm iron over a damp cloth, omitting ribbed parts. If Bri-Nylon Double Knitting has been used press with a dry cloth instead of a damp one.

JACKET

Using a back stitch, join side and sleeve seams. Sew in Sleeves. Join Front panels to fronts. Sew on Collar, placing cast off edge to neck and starting and ending at centre of each panel. Neaten buttonholes and sew on buttons. With the contrast colour wool work cross stitches across top of patterned section to give a yoke effect.

LEGGINGS

Stitch up the back and front seams, then the leg seams with a back stitch. Cut elastic to fit waist and thread through eyelet holes. Cut remainder of elastic into two 4 inch lengths and sew on to each side of the instep.

HAT

Join back seam and sew Strap to one corner. Neaten buttonhole and sew button on opposite corner to correspond. With the contrast colour wool work cross stitches around base of patterned section. Sew Pom-pon to top of Hat. To make a Pom-pon cut wool into 3 inch lengths, tie securely in the middle, fluff out and trim.

Do write if in need of advice on this pattern to Janet Minton, Emu Wools Ltd., 13/14 Woodstock St., London, W.1.